AEROSPOOL SPOL. S R.O.	SERVICE BULLETIN SBLSA-013-2016	Revision: 0 Date: 16.12.2016

This Service bulletin has been produced in accordance with approved Alternative Procedures to DOA EASA.AP356.
Technical data has been approved by EASA under Approval No.:

☐ INFORMATION ☐ RECOMMENDED ☒ **MANDATORY**

A. SUBJECT:

Installation of EPS actuator protector.

B. AFFECTED AIRPLANES:

DY-337/2009;	DY-347/2010 LSA;	DY-363/2010 LSA;	DY-366/2010 LSA;
DY-377/2010 LSA;	DY-387/2010 LSA;	DY-391/2010 LSA;	DY-392/2010 LSA;
DY-395/2010 LSA;	DY-400/2011 LSA;	DY-420/2011 LSA;	DY-427/2011 LSA;
DY-428/2011 LSA;	DY-429/2012 LSA;	DY-433/2012 LSA;	DY-434/2012 LSA;
DY-435/2012 LSA;	DY-436/2012 LSA;	DY-439/2012 LSA;	DY-442/2012 LSA;
DY-445/2012 LSA;	DY-449/2012 LSA;	DY-459/2012 LSA;	DY-460/2012 LSA;
DY-461/2012 LSA;	DY-464/2013 LSA;	DY-466/2013 LSA;	DY-470/2013 LSA;
DY-475/2013 LSA;			

C. REASON:

Installation of EPS actuator protector is necessary to comply with the requirement of CS-LSA Subpart K 6.3.6.4. The paragraph requires, that arming and activating the system can only be accomplished in a sequence that makes inadvertent deployment extremely improbable. The system must not be armed before the initiation of activation procedures.

D. REQUIRED ACTION:

WORK INSTRUCTIONS 1:

Applicable to the following aircrafts:

DY-400/2011 LSA;	DY-420/2011 LSA;	DY-428/2011 LSA;	DY-435/2012 LSA;
DY-439/2012 LSA;	DY-445/2012 LSA;		

1. Moving of Switches:

   1.1. Move the switch “TURBO” from the central console position to the switch line under the left Dynon SkyView D1000 (Figure 1).

Figure 1

1.2. Move switches and check lights of “TRANSFER FUEL PUMP” and “AUXILIARY FUEL PUMP” to the left, due to space for EPS actuator protector (Figure 2).

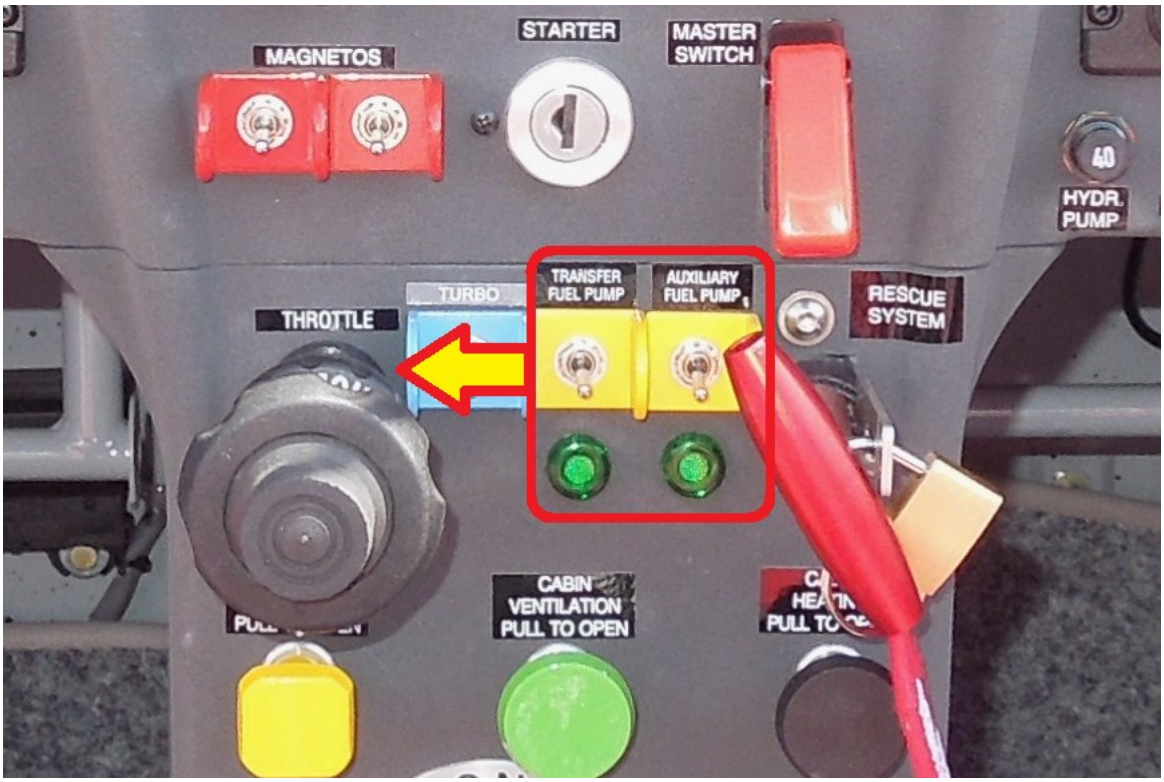

Figure 2

1.3. Blind the holes after removed switches and check lights.

WORK INSTRUCTIONS 2:

Applicable to the following aircrafts:

DY-347/2010 LSA;	DY-363/2010 LSA;	DY-366/2010 LSA;	DY-377/2010 LSA;
DY-387/2010 LSA;	DY-392/2010 LSA;	DY-395/2010 LSA;	DY-400/2011 LSA;
DY-420/2011 LSA;	DY-427/2011 LSA;	DY-428/2011 LSA;	DY-429/2012 LSA;
DY-433/2012 LSA;	DY-434/2012 LSA;	DY-435/2012 LSA;	DY-436/2012 LSA;
DY-439/2012 LSA;	DY-442/2012 LSA;	DY-445/2012 LSA;	DY-449/2012 LSA;
DY-459/2012 LSA;	DY-460/2012 LSA;	DY-461/2012 LSA;	DY-464/2013 LSA;
DY-466/2013 LSA;	DY-475/2013 LSA;		

2. Installation of EPS Actuator Protector – Version 1:

2.1. Remove the bolts (Figure 3). Do not remove the EPS actuator lock!

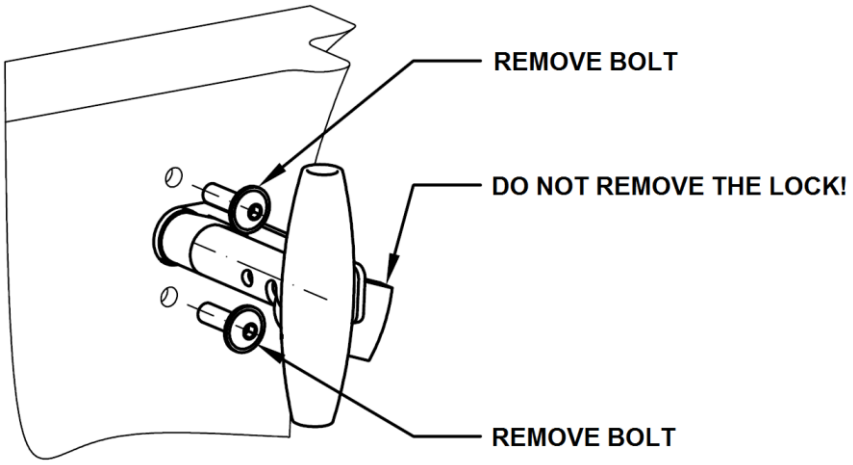

Figure 3

2.2. Install the protector console [1] using bolts [8]. Put the protector [2] with a spring [4] on the console [1], attach them using pin [3], washer [6] and split pin [7] (Figure 4).

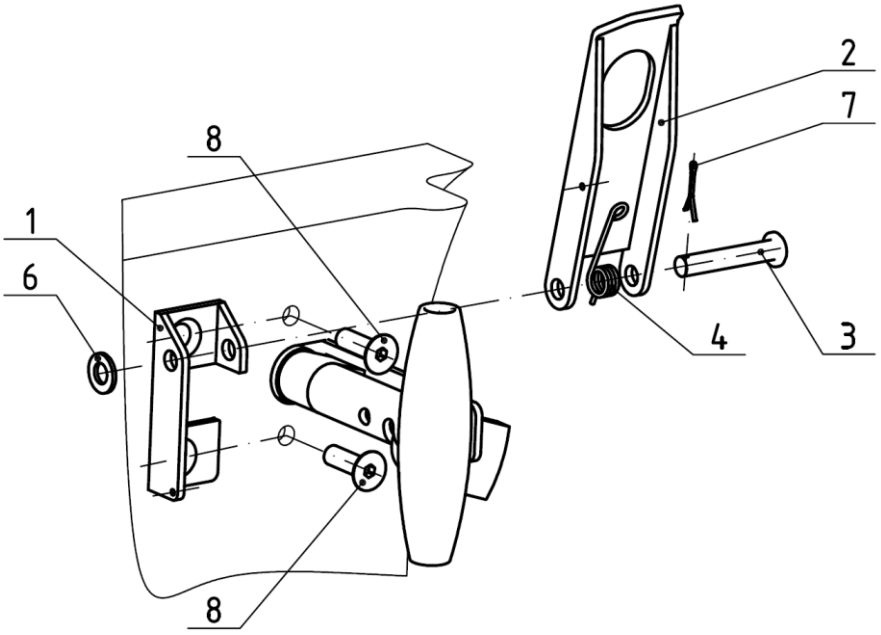

Figure 4

2.3. Close the protector [2] and lock it to the protector console [1] using a locking wire [11]. Apply the seal [12] at the end of locking wire (Figure 5).

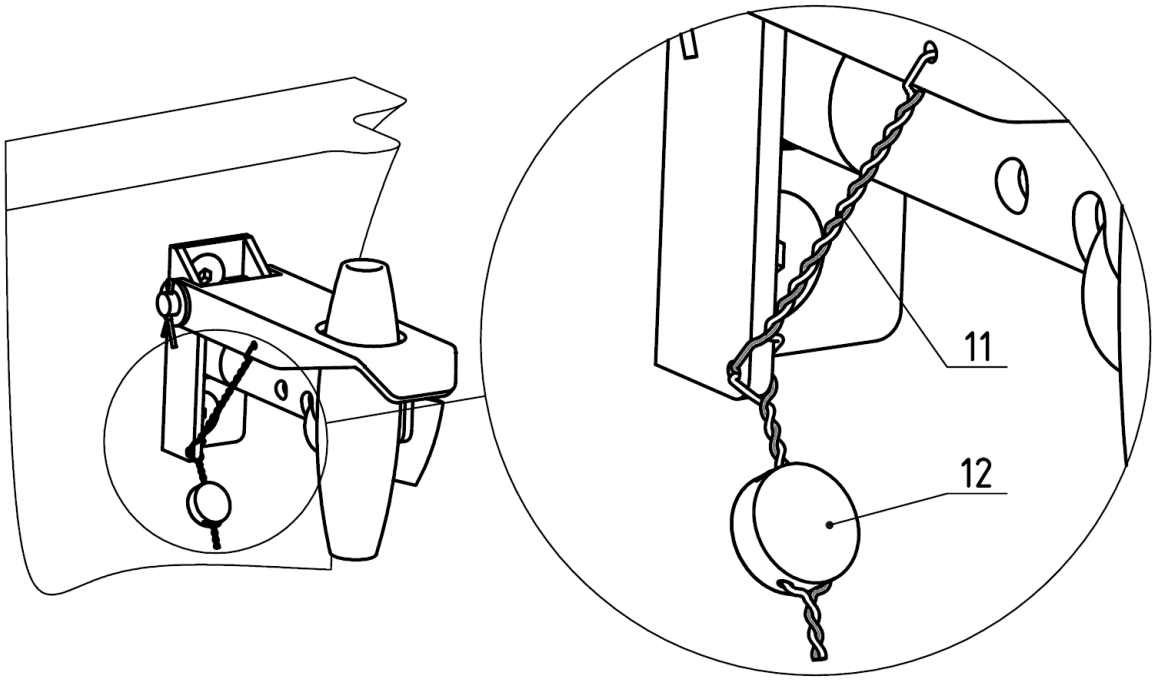

Figure 5

WORK INSTRUCTIONS 3:

Applicable to the following aircrafts:
DY-391/2010 LSA; DY-470/2013 LSA;

3. Installation of EPS Actuator Protector – Version 2:

3.1. Remove the bolts (Figure 6). Do not remove the EPS actuator lock!

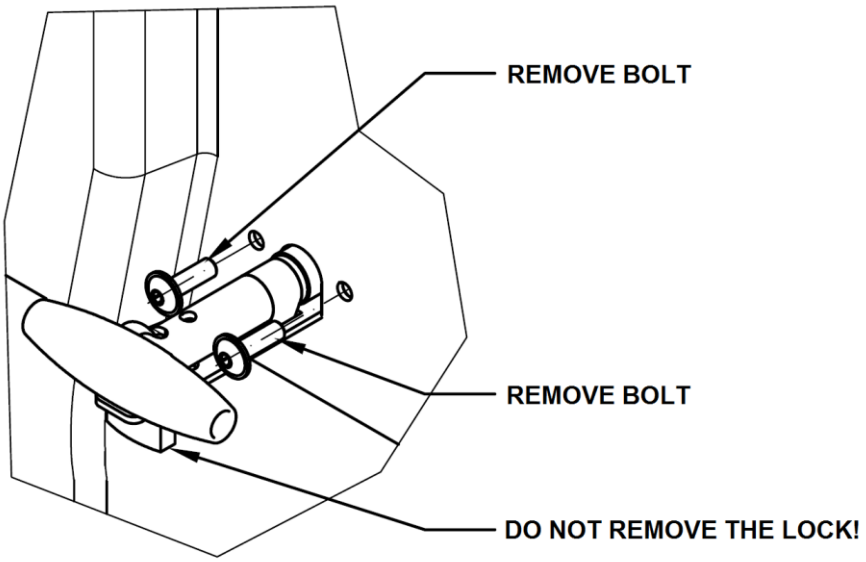

Figure 6

3.2. Install the protector console [1] using bolts [8]. Put the protector [2] with a spring [4] on the console [1], attach them using pin [3], washer [6] and split pin [7] (Figure 7).

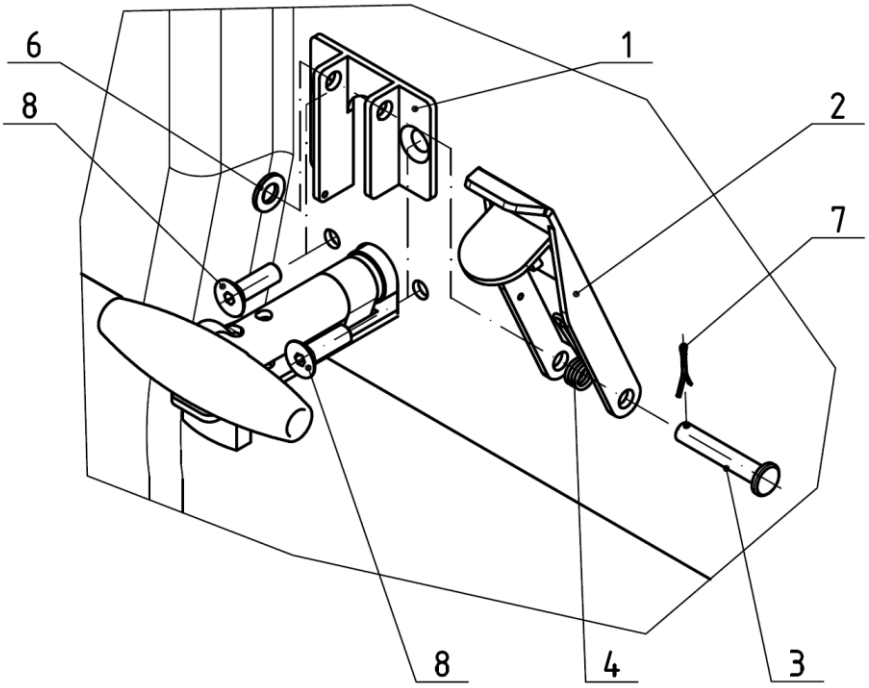

Figure 7

3.3. Close the protector [2] and lock it to the protector console [1] using a locking wire [11]. Apply the seal [12] at the end of locking wire (Figure 8).

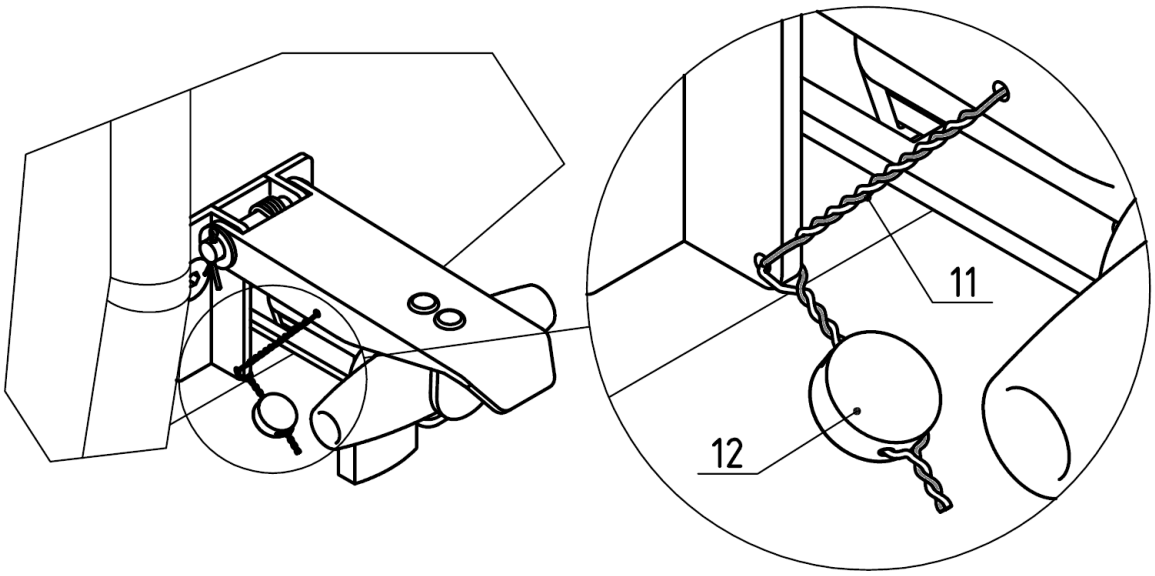

Figure 8

WORK INSTRUCTIONS 4:

Applicable to following aircrafts:
DY-337/2009;

4. Installation of EPS Actuator Protector – Version 3:

Warning!!!

In some work steps the EPS actuator will not be armed!

There is a risk of EPS system activation during incorrect manipulation with EPS actuator!

4.1. Carefully remove the bolts, washers, nuts (Figure 9). **Warning, the EPS actuator is not armed in this moment!** Temporary arm the EPS actuator by assembling of console and EPS actuator using bolts [9] and original washers and nuts (Figure 10).

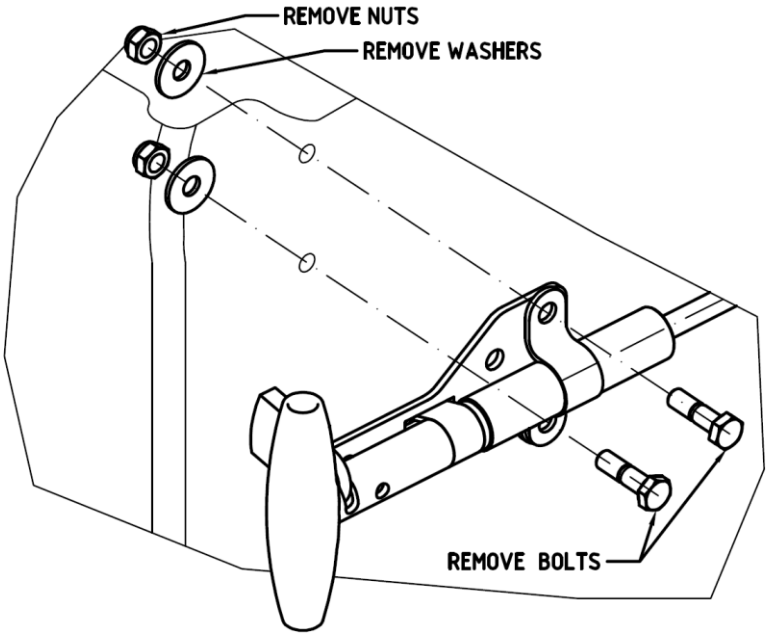

Figure 9

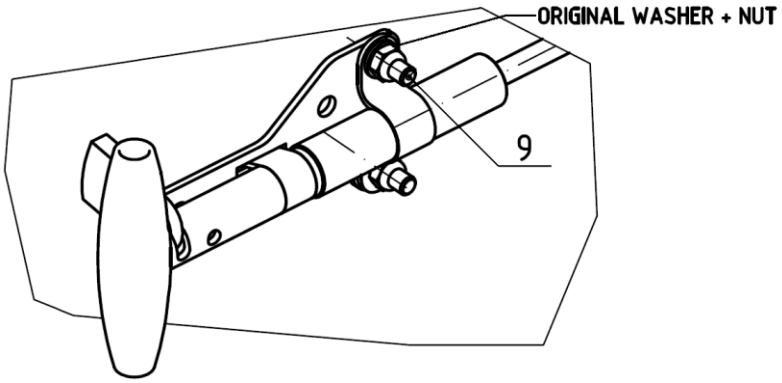

Figure 10

4.2. Drill one hole Ø5.5 into the right side of central tunnel according to the console [5]. Attach the console [5] to the central tunnel using bolts [10], distance washers [6], washers [14] and nuts [12] (Figure 11).

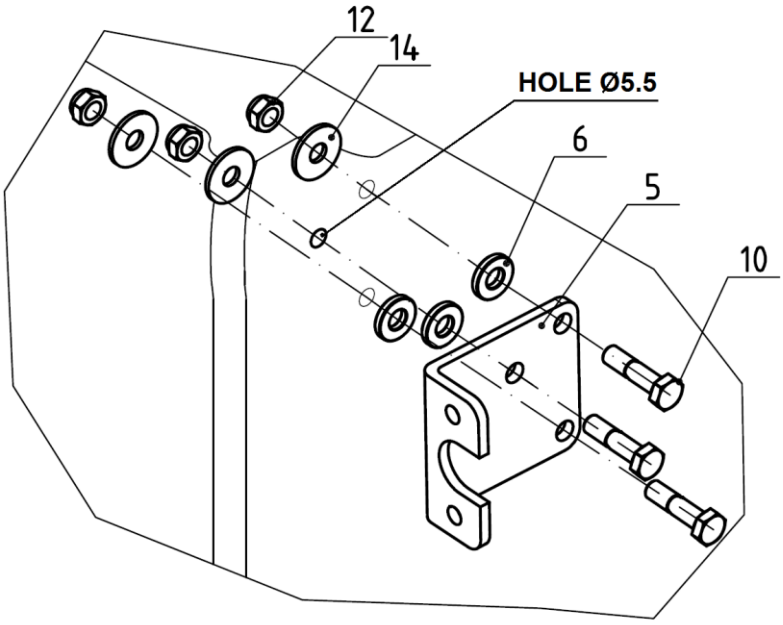

Figure 11

4.3. Carefully remove bolts [9], nuts, washers, Velcro and lock (Figure 12). **Warning, the EPS actuator is not armed in this moment!**

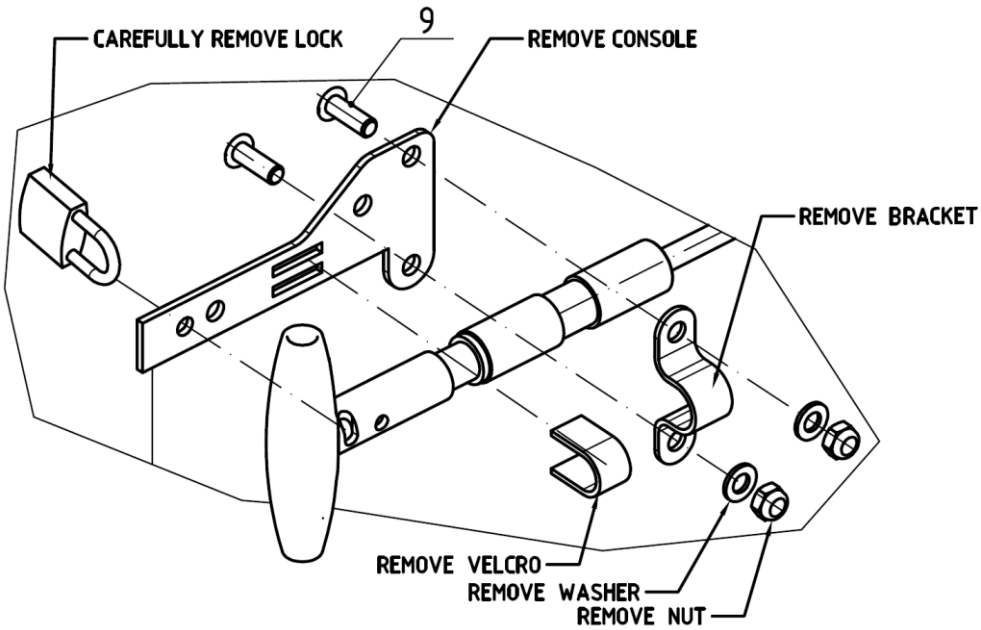

Figure 12

4.4. Attach the EPS actuator to the actuator holder [7] using original bracket, bolts [9], washers [13], nuts [12] and original Velcro. Install the original lock to secure the EPS actuator (Figure 13).

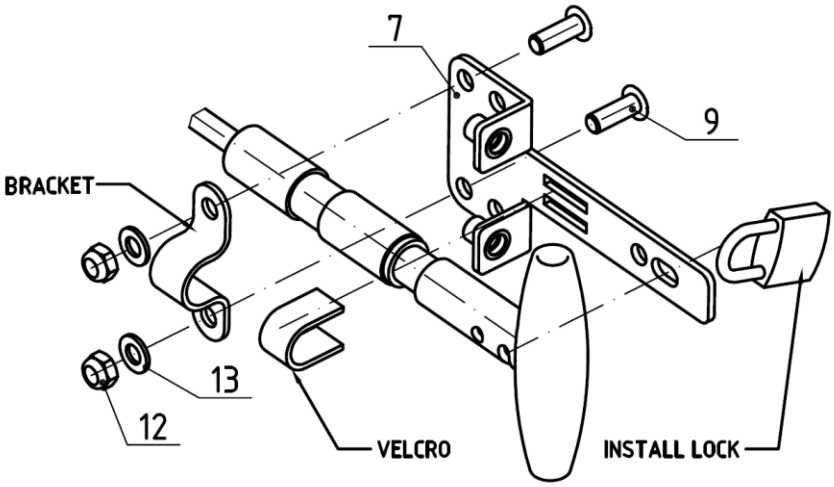

Figure 13

4.5. Attach the EPS actuator together with the protector console [1] to the console [5] using bolts [11]. Put the protector [2] with a spring [4] on the protector console [1], attach them using pin [3], washer [13] and split pin [15] (Figure 14).

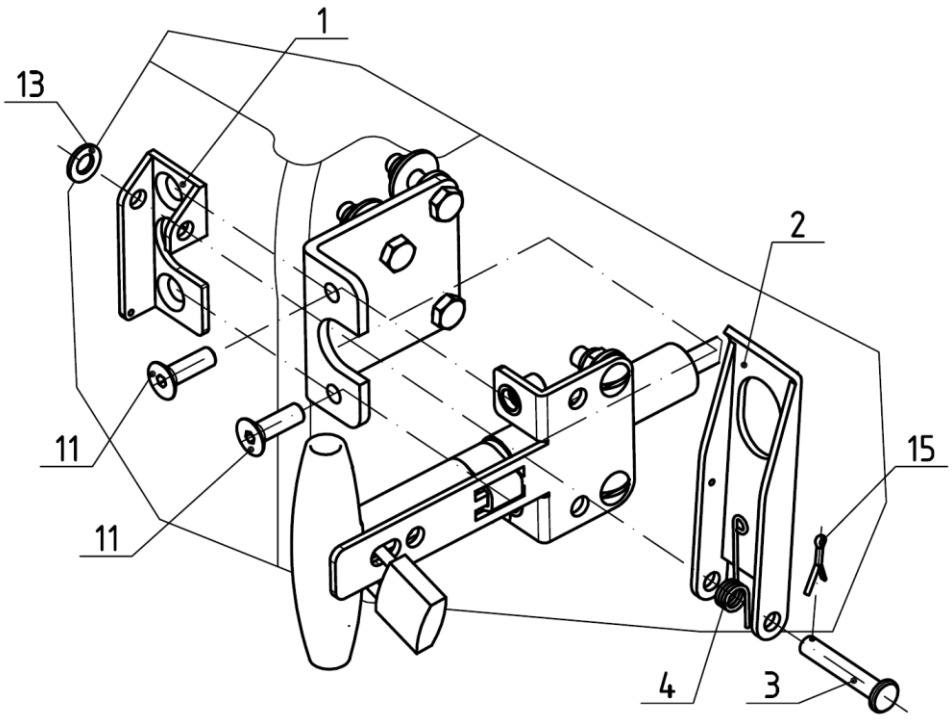

Figure 14

4.6. Close the protector [2] and lock it to the console [1] using a locking wire [11]. Apply the seal [12] at the end of locking wire (Figure 5).

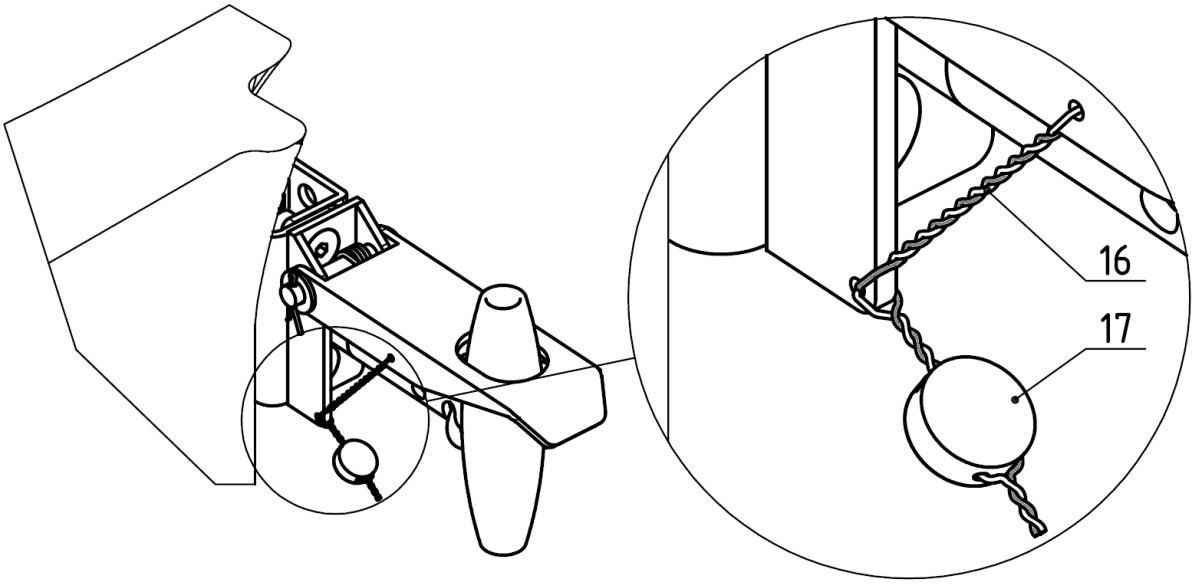

Figure 15

E. COMPLIANCE:

At next periodic inspection.

F. WEIGHT AND BALANCE:

Weight change: Negligible
Moment change: Negligible

G. ACTION CARRIED OUT BY:

- Airplane manufacturer Aerospool spol. s r. o.
- Maintenance organisation (Part-M, Part-145)
- Independent staff qualified in accordance with Part-66

H. COSTS COVERED BY:

Necessary material will be supplied by Aerospool spol. s r. o. free of charge.

I. NECESSARY MATERIAL:

For material purchase contact the airplane manufacturer's local representative or contact airplane manufacturer directly at spareparts@aerospool.sk.

MATERIAL FOR WORK INSTRUCTIONS 1:

None.

MATERIAL FOR WORK INSTRUCTIONS 2:

Position	Part Name	Part Number	Quantity
-	EPS actuator protector	DYN-160-07	1 pc

Kit contains:

Position	Part Name	Part Number	Quantity
[1]	Protector console	DYN-160-07-01	1 pc
[2]	Protector	DYN-160-07-02	1 pc
[3]	Pin	DYN-160-07-03	1 pc
[4]	Spring	DYN-160-07-04	1 pc
[6]	Washer 5.3 Zn	S005	1 pc
[7]	Split pin 1.2x25 Zn	A04741225	1 pc
[8]	Bolt M5x16	51060.050.016	2 pcs
[11]	Copper wire ø0.5 (STN 423001)	-	0.2 m
[12]	Seal red 9	-	1 pc

MATERIAL FOR WORK INSTRUCTIONS 3:

Position	Part Name	Part Number	Quantity
-	SBLSA-013-2016 KIT1	SBLSA-013-2016-1	1 pc

Kit contains:

Position	Part Name	Part Number	Quantity
[1]	Protector console	D256010090	1 pc
[2]	Protector	D25601200A	1 pc
[3]	Pin	DYN-160-07-03	1 pc
[4]	Spring	DYN-160-07-04	1 pc
[6]	Washer 5.3 Zn	S005	1 pc
[7]	Split pin 1.2x25 Zn	A04741225	1 pc
[8]	Bolt M5x16	51060.050.016	2 pcs
[11]	Copper wire ø0.5 (STN 423001)	-	0.2 m
[12]	Seal red 9	-	1 pc

MATERIAL FOR WORK INSTRUCTIONS 4:

Position	Part Name	Part Number	Quantity
-	SBLSA-013-2016 KIT2	SBLSA-013-2016-2	1 pc

Kit contains:

Position	Part Name	Part Number	Quantity
[1]	Protector console	DYN-160-07-01	1 pc
[2]	Protector	DYN-160-07-02	1 pc
[3]	Pin	DYN-160-07-03	1 pc
[4]	Spring	DYN-160-07-04	1 pc
[5]	Console	D256010050	1 pc
[6]	Distance washer	D256010060	3 pcs
[7]	Actuator holder	-	1 pc
[9]	Bolt M5x16 A2	908425-16	2 pcs
[10]	Bolt M5x20 Cd	05020	3 pcs
[11]	Bolt M5x16	51060.050.016	2 pcs
[12]	Self-locking nut M5 Zn	L01-0128	5 pcs
[13]	Washer 5.3 Zn	S005	3 pc
[14]	Large washer 5.3 Zn	38210.050.001	3 pcs
[15]	Split pin 1.2x25 Zn	A04741225	1 pc
[16]	Copper wire ø0.5 (STN 423001)	-	0.2 m
[17]	Seal red 9	-	1 pc

J. DOCUMENTATION:

Record the compliance with this Service Bulletin in the airplane documentation.

K. ENCLOSURES:

None.

L. APPROVAL:

Vladimír Martinák Head of Design Organisation Position, Name, Signature	Jozef Šnirc Technical Director Position, Name, Signature