AEROSPOOL SINCE 1991	**SERVICE BULLETIN SBRTC-2019-3**	Revision: **Initial** Date: **25.01.2021**
This Service Bulletin has been produced in accordance with approved Alternative Procedures to DOA EASA.AP356.		
☐ INFORMATION	☑ **OPTIONAL/RECOMMENDED**	☐ MANDATORY

A. SUBJECT:

Possible retrofit of Major Design Change – Transponder Garmin GTX 335 with ADS-B Out.

B. AFFECTED AIRPLANES:

All aircraft from S/N 17001 up to S/N 20005 inclusive.

C. REASON:

Aerospool spol. s r. o. issues this Service Bulletin in order to enable retrofit the transponder Garmin GTX 335 with ADS-B Out as a Major Design Change of WT9 Dynamic LSA.
For that purpose, the modifications listed in the section “D” must be performed.

D. REQUIRED ACTION:

To install the transponder GTX 335 proceed as follows:

1. Preparation:

1.1. Set **MASTER SWITCH** to **OFF** position.

1.2. Remove the instrument panel cover (see AMM, Chapter 39).

1.3. Remove the EPS cover (see AMM, Chapter 06).

1.4. Remove the radio unit from the rack (see AMM, Chapter 39).

1.5. Remove the transponder GTX 328 from the rack (see AMM, Chapter 39).

1.6. Remove the altitude encoder ACK-30 (see AMM, Chapter 34).

1.7. Disconnect all connectors from the GTX 328 transponder’s backplate and remove the backplate.

1.8. Remove nuts (5, Fig. 1), washers (6), struts (2), screws (3; 4) and remove the GTX 328 rack (1) from the instrument panel (see Fig. 1).

1.9. Disconnect and remove the XPDR circuit breaker 5A.

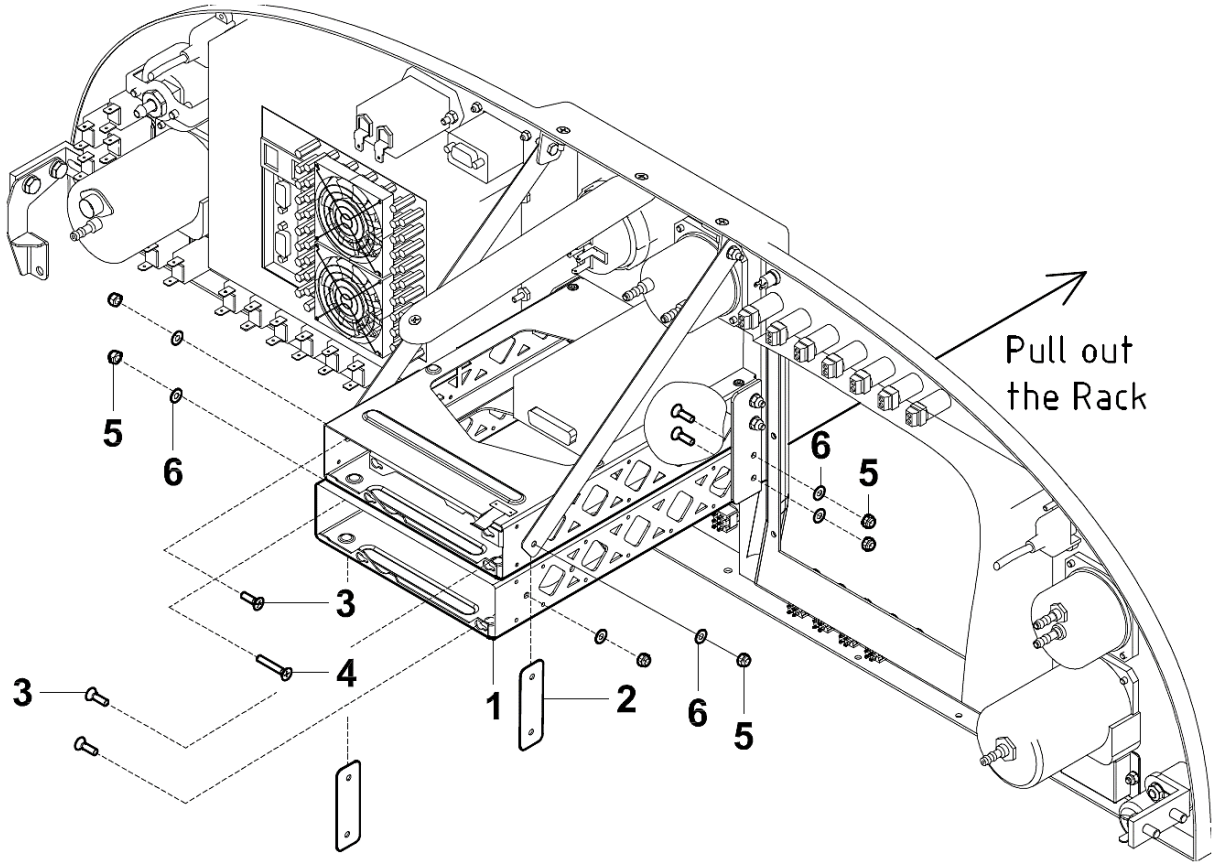

1 – GTX 328 rack
2 – Strut 20 x 62
3 – Screw M4 x 12
4 – Screw M4 x 25
5 – Self-locking nut M4
6 – Washer 4.3 x 9 x 0.8

Fig. 1 GTX 328 Rack Removal

2. Fuselage preparation:

Note: All dimensions are in millimeters.

2.1. Stiffen the fuselage skin from the inner side in the area of GPS antenna GA 35 installation according to Fig. 2 (All dimensions are in millimeters).

2x Number of layers

92125 Type of fabric (Glass fabric, 280 g/m^2)

0°, 90° Orientation of fabric's warp in regard to reference axes

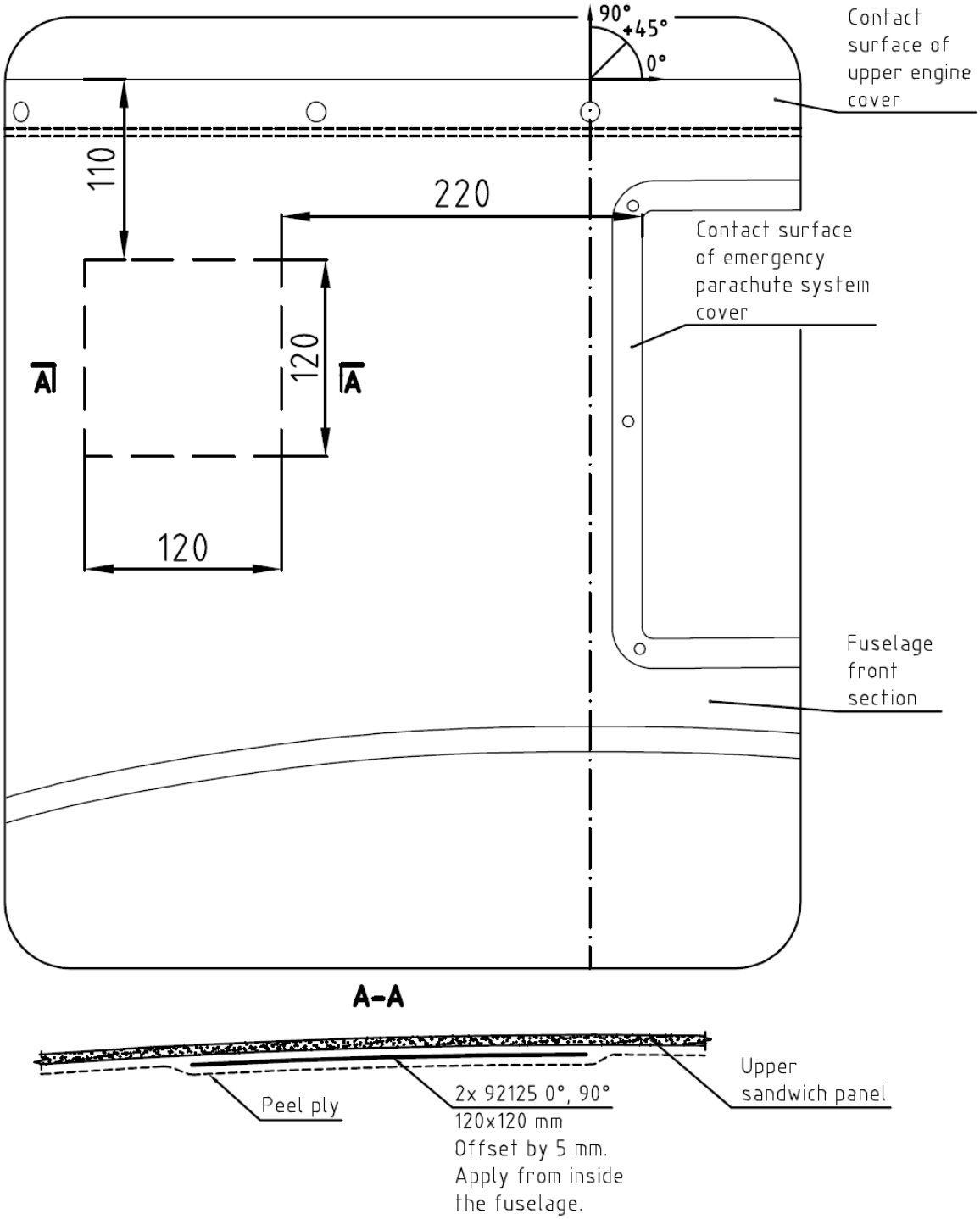

Fig. 2 Stiffening of Fuselage Skin in the Area of Antenna GA 35 Installation

2.2. Drill the holes according to antenna GA 35, remove the foam around the holes and fill with the epoxy resin mixed with cotton flocks (EZBV) according to Fig. 3. Let the resin to harden. Apply local heat treatment on the stiffened area for 15 hours at 54 °C.

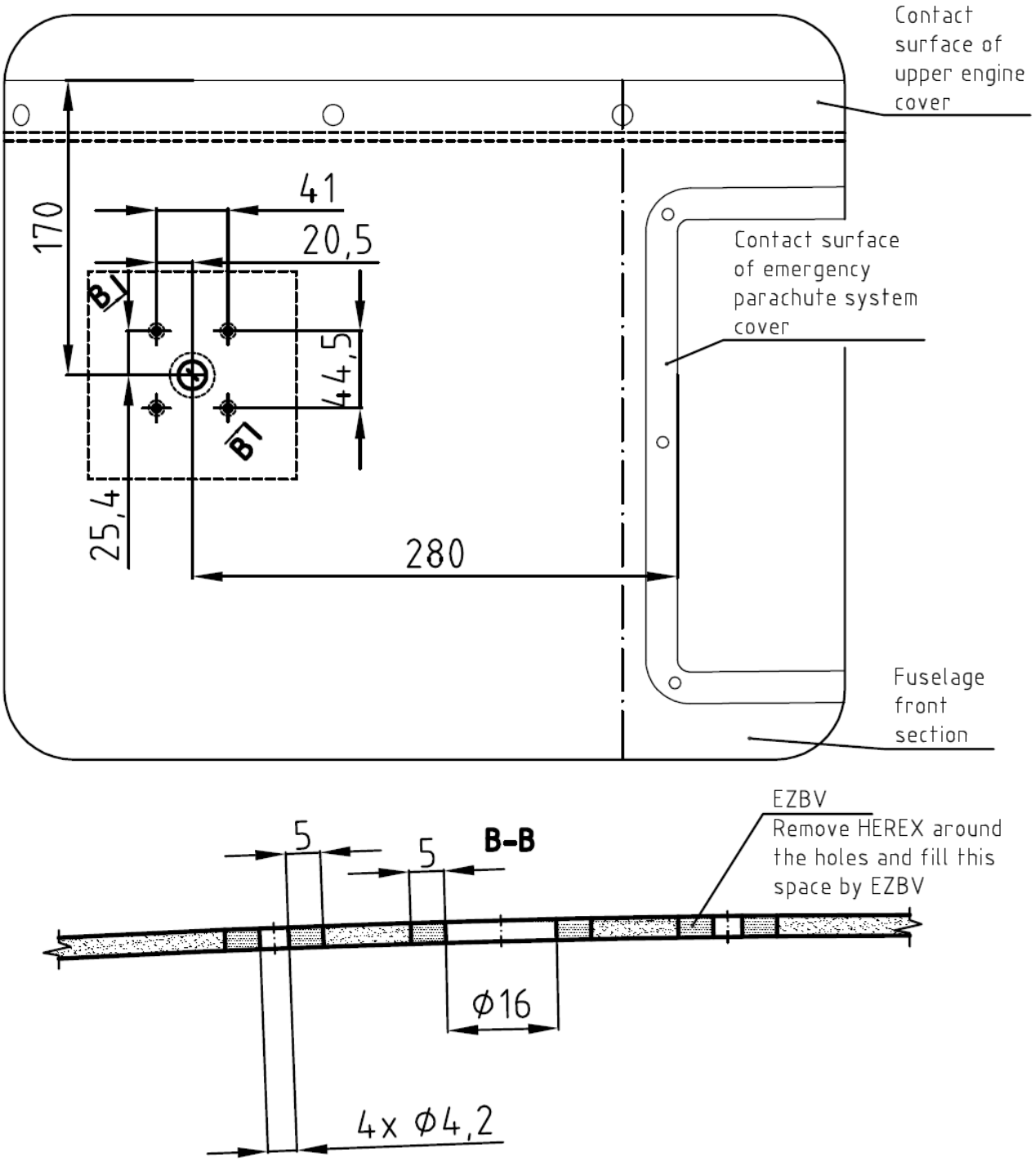

Fig. 3 Installation Holes for Antenna GA 35

3. Installations:

3.1. Install XPDR circuit breaker 3A.

3.2. Place the GTX 335 rack (1, Fig. 4) in correct position in the instrument panel and attach it by means of struts (2), screws (3; 4), washers (6) and nuts (5).

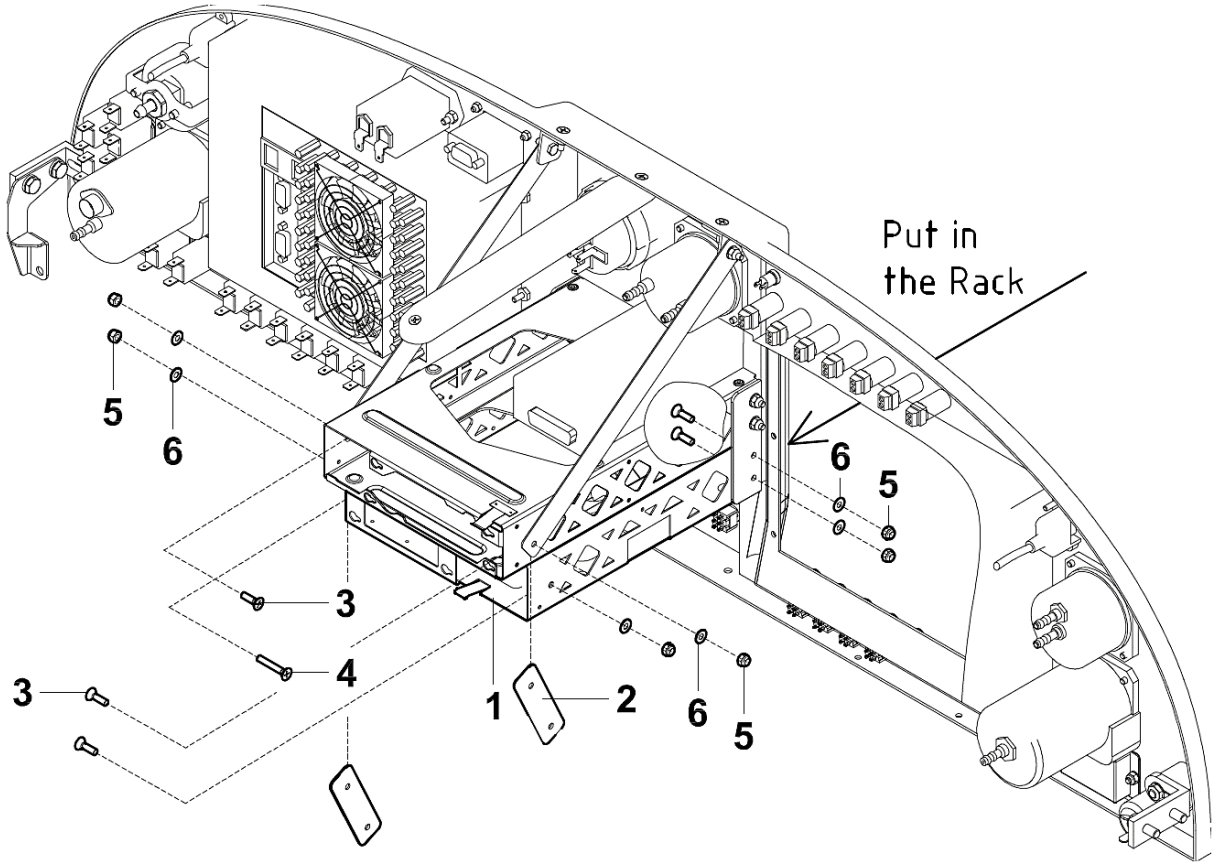

1 – GTX 335 rack
2 – Strut 20 x 68
3 – Screw M4 x 12
4 – Screw M4 x 25
5 – Self-locking nut M4
6 – Washer 4,3 x 9 x 0,8

Fig. 4 GTX 335 Rack Installation

3.3. Install the altitude encoder GAE 12 to the backplate, connect to the pitot-static system, connect the connectors to the backplate and install the backplate on the rack (see AMM, Chapter 34).

3.4. Install the transponder GTX 335 to the rack (see AMM, Chapter 39).

3.5. Install the antenna GA 35 on the fuselage (see AMM, Chapter 34). Connect the antenna GA 35 to the GTX 335.

3.6. Connect the GTX 335 with the other equipment according to wiring diagrams:

Configuration FG912 - D90108020A

Configuration FG912T - D90108020B

3.7. Install the radio unit to the rack (see AMM, Chapter 39).

4. Adjustment and checks:

4.1. Perform pitot-static system leak test (see AMM, Chapter 34).

4.2. Set **MASTER SWITCH** to **ON** position.

4.3. Update of Dynon SkyView firmware to version 15.4.7 according to SBRTC-2019-4 must be performed.

4.4. Perform setting of transponder Garmin GTX 335 according to GTX 335 Transponder Installation Manual and Tab. 1.

Parameter	**Value**	**Note**
Aircraft Registration	XXXXX	Enter the aircraft's callsign
ICAO Address	XXXXXX	Enter the aircraft's ICAO address
MAX Airspeed	<=150 knots	-
Length	<=15.0 meters	-
Width	<=23.0 meters	-
Category	A: Light (<15.500 lbs)	-
Stall Speed (knots)	48	-
1090 ES In Capable	Yes	-
VAT In Capable	No	-
1090 ES Out Control	Always Enabled	-
Enhanced Surveillance	Enabled	-
VFR Squawk Code	7000	-
Altitude Units	Feet	-
RS-232 Channel	1	-
Input Format	Remote Format 1	-
Output Format	Remote Format 1	-

Tab. 1

4.5. Configure the altitude encoder GAE 12 according to GTX 335 Transponder Installation Manual:

INTERNAL ALT INSTALLED: YES

ALT ENCODER CEILING: 18 000 ft

INSTALLED TEST POINTS: 12 (recommended)

4.6. Perform ground check of XPDR Garmin GTX 335 according to GTX 335 Transponder Installation Manual.

4.7. Check Garmin GTX 335 status is displaying on Dynon SkyView screen.

4.8. Carry out a final visual inspection of the installation.

5. Finishing and documentation:

5.1. Check that no foreign objects remained in the aircraft.

5.2. Install the EPS cover (see AMM, Chapter 06).

5.3. Install the instrument panel cover (see AMM, Chapter 39).

5.4. Update the aircraft documentation:

5.4.1. Update the POH record new weight and balance data in the Chapter 6 and list of inserted supplements in the Chapter 9.

5.4.2. Update the equipment list in the POH Supplement No. 001.

5.4.3. Update the POH Supplement No. 003 (only aircraft with tow equipment).

5.4.4. Insert the POH Supplement No. 010.

5.4.5. Update the AMM.

5.4.6. Update the AWM.

5.5. Record the compliance with this bulletin into aircraft documentation.

E. COMPLIANCE:

Optional.

F. WEIGHT AND BALANCE:

Weight change: -0.47 kg
Moment change: -1.24 kg.m

G. ACTION CARRIED OUT BY:

- Approved Maintenance Organization
- Independent certifying staff qualified in accordance with Part-66

H. COSTS COVERED BY:

Costs covered by aircraft owner.

I. NECESSARY MATERIAL:

Necessary material will be supplied by aircraft manufacturer Aerospool, spol. s r. o.
For material purchase contact the airplane manufacturer's spare parts department at spareparts@aerospool.sk.

Item	Part Name	Part Number	Quantity
-	SBRTC-2019-3 KIT	SBRTC-2019-3	1 pc

Part Number SBRTC-2019-3 contains:

Item	Part Name	Part Number	Quantity
1	STRUT 20x68	D391000190	2 pcs
2	TRANSPONDER GTX 335	N7324-011	1 pc
3	BACKPLATE ASSY	N7324-012	1 pc

Item	Part Name	Part Number	Quantity
4	INSTALL RACK	N7324-013	1 pc
5	CONFIGURATION MODULE	N7324-014	1 pc
6	PUSH-ON FITTINGS	N3830-002	1 pc
7	ALTITUDE ENCODER GAE 12	N7325-202	1 pc
8	REFLECTIVE SURFACE	D345006010	1 pc
9	ANTENNA GPS GA35	N7354-009	1 pc
10	SCREW M4x30	N3135-019	4 pcs
11	SELF-LOCKING NUT M4 Cd	N3227-001	4 pcs
12	WASHER 4,3 Zn	N3254-002	4 pcs
13	WASHER 4,3 Zn	N3250-004	1 pc
14	ADAPTOR FOR GAE 12	N3830-002	1 pc
15	SPRING CLAMP Ø9	N4342-004	2 pcs
16	PITOTSTATIC HOSE 5x1,5	N3913-301	400 mm
17	GLASS FABRIC 92125	N2621-008	0.1 m^2
18	PEEL PLY, WIDTH 200 mm	N2623-005	0.5 m
19	Circuit breaker 3A	N2929-451	1 pc
20	EPOXY RESIN MGS L285	N2750-002	As Required
21	EPOXY HARDENER MGS 287	N2760-002	As Required
22	COTTON FLOCKS	N2780-007	As Required
23	TNC CONNECTOR 90°	N2929-451	2 pcs
24	Coaxial cable	N2942-001	0.7 m

J. DOCUMENTATION:

AS-POH-01-000	Pilot's Operating Handbook, Rev. 4 or later approved revision
AS-POH-01-001	POH Supplement No. 001 – Equipment List 1, Rev. 4 or later approved revision.
AS-POH-01-003	POH Supplement No. 003 – Propeller KW-31 / Towing Operation, Rev. 2 or later approved revision
AS-POH-01-010	POH Supplement No. 010 – Garmin GTX 335 XPDR, initial issue or later approved revision
AS-AMM-01-000	Aircraft Maintenance Manual, Rev. 4 or later approved revision
AS-AWM-01-000	Aircraft Wiring Manual, Rev. 4 or later approved revision
P/N 190-01499-02	Garmin GTX 335 Transponder Installation Manual, Rev. 14 or later approved revision

K. ENCLOSURES:

AS-POH-01-010 POH Supplement No. 010 – Garmin GTX 335 XPDR, initial issue

L. APPROVAL:

This Service Bulletin was issued on the base of Major Change Approval No. 10075449.

Vladimír Martinák Head of Design Organisation Position, Name, Signature	Jozef Šnirc Technical Director Position, Name, Signature